CET Electric Technology

iRelay 50-P
Dual and Self Powered Protection Relay

Overview

The iRelay 50-P is CET's elaborately designed Dual and Self Powered Protection Relay for LV, MV and HV power systems featuring compact construction, integrating a 32-bit low-power embedded processor, a 16-bit A/D converter, and a large-capacity high-speed non-volatile memory chip with unlimited read-write cycles. It comes with 2xDigital Input, 2xDigital Output, and 1xRS-485 port that supports Modbus RTU protocol. In addition, it can operate in both self-power supply mode from external CTs and auxiliary power supply mode. This makes the iRelay 50-P an essential component of an intelligent, comprehensive protection solution, especially suitable for specific application scenarios where external auxiliary power is unavailable yet microcomputer-based protection is required.

Typical Applications

- Ring Main Units
- Gas-Insulated Switchgear
- Photovoltaic Pad-Mounted Transformer
- Distribution Substation Retrofit Project

Basic Features

- A large LCD with user-friendly graphic interfaces
- 32-bit Dual-Core CPU, 16-bit A/D converter, non-volatile memory
- Self-powered from CTs with low power consumption
- Supports a 24VDC or 48VDC auxiliary power supply mode

Inputs and Outputs

- 4xProtection Current Input: IA, IB, IC and IN
- 3xSelf-powered Current Input: I1, I2 and I3
- 2x24/48VDC Digital Input: IN1, IN2
- 2xDigital Output:
  - OUT1: Dry Contact Output
  - OUT2: Active Pulse Output @ 24/48VDC as NO auxiliary contact

Metering and Records

- Primary measurements: Ia, Ib and Ic
- Secondary measurements: IA/IB/IC, IN, I1, I2, I0, Accumulation of Inverse-time Protection (%): IA/IB/IC/IP, IN, I2/I0
- SOE Log
  - 256 FIFO events time-stamped to ±1ms resolution
  - I/O Changes, Protection Logs, Power On/Off, Setup Changes, Time Sync., Device Operations and Self-diagnostics, etc.
  - Timestamp and characteristic data are recorded

Protection Functions

- Comprehensive protection functions with reliable performance and fast response
- Cold Start Tripping time < 100ms
- Inrush Current Blocking (68H2)
- Overcurrent Block Protection (50/68)
- Instantaneous Overcurrent Protection (50P-1)
- Instantaneous Overcurrent Protection with Definite Time (50P-2)
- Overcurrent Protection Stage I, II and III (50P-3/-4/-5)
- Overload Protection (50P-6)
- Inverse Time Overcurrent Protection (51P)
- External Zero Sequence Overcurrent Protection (50N standard zero-sequence measurement CT)
- External Zero Sequence Inverse Time Overcurrent Protection (51N standard zero-sequence measurement CT)
- Self-generated Zero Sequence Overcurrent Protection (50N three-phase current calculation (Self-generated))
- Self-generated Zero Sequence Inverse Time Overcurrent Protection (51N three-phase current calculation (Self-generated))
- Negative Sequence Overcurrent Protection (46)
- Negative Sequence Inverse Time Overcurrent Protection (51Neg)
- Digital Input Protection IN1, IN2 (DI Relay)

Communications

RS-485 (P1)

- Dual optically isolated RS-485 ports with Baud Rate from 2.4 to 38.4 kbps
- Modbus RTU protocol

Time Synchronization

- Battery-backed Real-time clock
- Time Sync. via RTC and Modbus

System Integration

- The iRelay 50-P is supported by CET's PecStar® iEMS
- The iRelay 50-P can be easily integrated into other 3rd party systems via Modbus RTU protocol

Technical Specifications

Self-powered Current Inputs (I1*, I1, I2*, I2, I3*, I3)	
CT Load Capacity	≥5VA
Primary Load Current	>15A and exceed 10% of the $I_{nominal}$
Secondary Load Current	>75mA
Protection Current Inputs (IA*, IA, IB*, IB, IC*, IC, IN*, IN)	
In (Ip Nominal)	1A or 5A
IN	5A/1A Compatible
Burden	<1VA/per phase
Overload	2xIn continuous, 10xIn for 10s, 40xIn for 1s
Frequency	50Hz/60Hz
Power Supply (+, -)	
Auxiliary Power Supply	24VDC or 48VDC, ±20%
Burden	<2W
Digital Inputs (IN1, IN2, COM)	
Type	Dry contact, 24/48VDC internally wetted
Hysteresis	1ms
Digital Outputs (OUT1, OUT2)	
OUT1	Dry Contact
Turn-on Capacity	5A for continuous, 30A for 0.2s
Active Time	<10ms
Return Time	<5ms
Breaking Capacity	
DC	Resistive @50W, Inductive @35W (L/R = 0.04s)
AC	1250VA, 5A maximum
OUT2	Active Pulse Output
Tripping Energy	>3Ws
Output Voltage	24VDC or 48VDC (>16Ω or >64Ω Tripping Coil Resistance, respectively)
Environmental Conditions	
Operating Temperature	-25°C to 70°C
Storage Temperature	-40°C to 85°C
Humidity	5% to 95% non-condensing
Atmospheric Pressure	70 kPa to 110 kPa
Altitude	<3000m
Mechanical Characteristics	
Panel Cutout	121x92 mm
Unit Dimensions	126x96x100.8 mm
Front Panel IP Rating	IP40

Dimensions and Installation (Unit: mm)

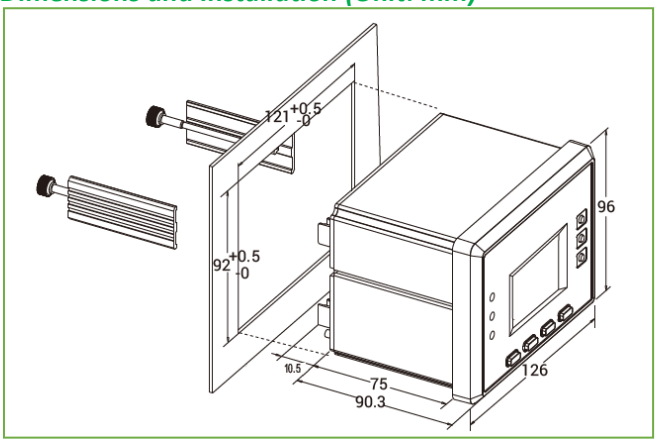

Designed For Reliability **Manufactured To Last**

CET Electric Technology

iRelay 50-P
Dual and Self Powered Protection Relay

Operating Range and Accuracy

Operating Range		
Ip (Phase Current)	0.05In-20In	
Frequency	50Hz/60Hz	
Protection Settings Accuracy		
Current	≤±2.5% or ±0.01In	
Action Time Accuracy		
Inherent Action	≤40ms (impose 1.2x action setting excitation for over-protection, and 0.7x action setting excitation for under-protection)	
Definite-time Action	≤±40ms or 1% (impose 1.2x action setting excitation for over-protection, and 0.7x action setting excitation for under-protection)	
Inverse-time Action	≤±5% (1 - I/(I_{set}*80)) or ±40ms, where I is the imposed exciting current, while I_{set} is the set current value	
Cold Start Instantaneous Trip Action Time	≤±100ms (2x action setting and supply current > 0.2A)	
Measurement Accuracy		
Parameters	**Accuracy**	**Resolution**
Current	±0.5%	0.001A
Frequency	±0.02Hz	0.001Hz

Standard of Compliance

Safety Requirements	
CE LVD 2014 / 35 / EU	EN 61010-1: 2010 + A1: 2019 EN IEC 61010-2-030: 2021 + A11: 2021
Electrical Safety in Low Voltage Distribution Systems up to 1000Vac and 1500 Vdc	IEC 61557-12: 2021 (PMD)
Insulation AC Voltage Insulation Resistance Impulse Voltage	EN 61010-1: 2010 + A1: 2019 2kV @ 1 minute >100MΩ 5kV, 1.2/50µs
EMC Compatibility CE EMC Directive 2014 / 30 / EU (EN IEC 61326: 2021 + EN IEC 61326-2-3: 2021)	
Immunity Test	
Electrostatic Discharge	EN 61000-4-2: 2009
Radiated Fields	EN IEC 61000-4-3: 2020
Fast Transients	EN 61000-4-4: 2012
Surges	EN 61000-4-5: 2014 + A1: 2017
Conducted Disturbances	EN 61000-4-6: 2014
Magnetic Fields	EN 61000-4-8: 2010
Impulse Magnetic Fields	IEC 61000-4-9: 2016
Voltage Dips and Interruptions	EN IEC 61000-4-11: 2020
Ring Wave	EN 61000-4-12: 2017
Ripple on DC Input Power Port	EN 61000-4-17: 1999 + A2: 2009
Damped Oscillatory Wave	EN IEC 61000-4-18: 2019
Power Frequency Immunity	IEC 60255-26: 2023
Emission Test	
Limits and Methods of Measurement of Electromagnetic Disturbance Characteristics of Industrial, Scientific and Medical (ISM) Radio-Frequency Equipment	EN 55011: 2016 + A1: 2017 + A11: 2020 + A2: 2021
Electromagnetic Compatibility of Multimedia Equipment - Emission Requirements	EN 55032: 2015 + A11: 2020 + A1: 2020
Limits for Harmonic Current Emissions for Equipment with Rated Current ≤16 A	EN IEC 61000-3-2: 2019 + A1: 2021
Limitation of Voltage Fluctuations and Flicker in Low-Voltage Supply Systems for Equipment with Rated Current ≤16 A	EN 61000-3-3: 2013 + A1: 2019 + A2: 2021
Emission Standard for Industrial Environments	EN IEC 61000-6-4: 2019
Mechanical Tests	
Vibration Test	IEC 60255-21-1
Shock and Bump Test	IEC 60255-21-2
Seismic Test	IEC 60255-21-3

Rear Terminals

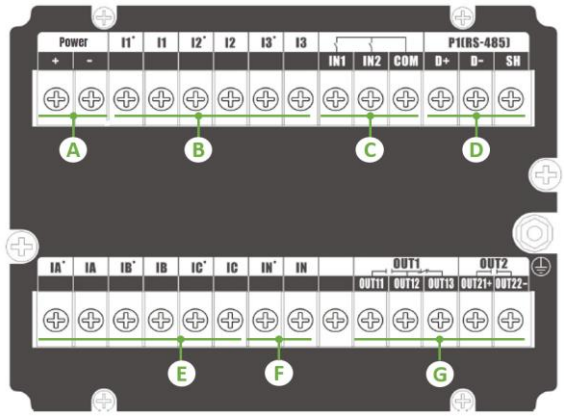

A	Auxiliary Power Supply	
B	Self-powered Current Input from external CTs	
C	2xDigital Input	
D	RS-485 port	
E	3-Phase Protection Current Inputs	
F	Zero Sequence Current Input	
G	OUT1	Dry Contact Digital Output
	OUT2	Active Pulse Output

Ordering Information

CET — *Version 20260128*

Product Code	Description
iRelay 50-P Dual and Self Powered Protection Relay	
Language	
E	English
Ip (Phase Current)	
5	5A
1	1A
IN (Neutral Current)	
1	5A/1A Compatible
Power Supply (Trip Pulse Output)	
1	24VDC
2	48VDC
System Frequency	
5	50Hz
6	60Hz
DI Excitation	
N	Internally Excited
Communication Ports	
A	1xRS-485
Tripping Capability	
Z	Enhanced Tripping

iRelay 50-P - E 5 1 2 5 N A Z — iRelay 50-P-E5125NAZ (Standard Model)

Notes:

1. The iRelay 50-P draws power from CTs. Please refer to "Guidelines for Selecting the iRelay 50-P Overcurrent Relay" to verify whether the on-site CT meets the device's power supply requirements .
2. The iRelay 50-P trips the circuit breaker via a tripping pulse, which imposes specific requirements on the trip coil of the circuit breaker. Please refer to the "Guidelines for Selecting the iRelay 50-P Overcurrent Relay" to verify whether the iRelay 50-P meets the tripping requirements of the circuit breaker.

CET Electric Technology Inc.

E: sales@cet-global.com

W: www.cet-global.com

Your Local Representative

Revision Date: March 3, 2026

Designed For Reliability *Manufactured To Last*